cubo

rps PASSION FOR COOLING

Liquid chillers

for industrial applications with piston and scroll compressors

R513A REFRIGERANT

ErP Tier2



❄ | Cooling capacity from 0,9 to 15 kW

MC00000085_202602



Technology, Innovation, and Reliability in Process Cooling

Customized Process Solutions for a Sustainable Future

RPS develops customized process chillers designed to ensure continuous reliability and high performance in every industrial application. RPS's goal is to transform every thermal requirement into an **efficient and technologically advanced system**, capable of offering lasting value to its customers.

RPS looks to the future with an **innovative approach**, offering solutions that integrate **green refrigerants** such as **R290, R454B, R32, and R513A**, compliant with F-GAS and REACH regulations.

Each project is designed to meet the **highest standards of energy efficiency**, in line with Ecodesign requirements and the challenges of the energy transition.

Energy-saving technologies, full inverter systems, free cooling, and heat pumps are at the heart of the design to reduce consumption and environmental impact.
Thanks to its ability to customize every detail, RPS becomes a strategic partner in the sustainable growth of its customers.

Future-Ready Technology

RPS and the Challenge of Global Warming Potential

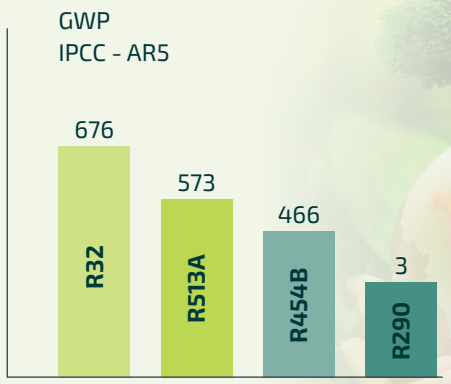

Low GWP refrigerant solutions for a more sustainable future

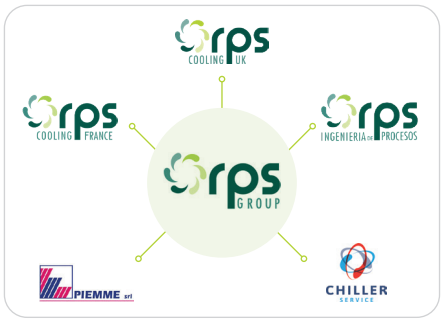

CHILLER SERVICE

Sales by geographical area

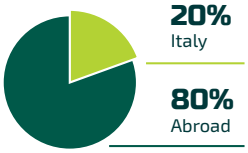

The RPS Group

RPS is a group with a European presence through branches in the UK, France, and Spain. Thanks to the in-house metalworking department of PIEMME S.r.l., it guarantees maximum flexibility, production speed, and customization of chillers.

RENTAL

With a large fleet of chillers ready for rental and a team of expert technicians, CHILLER SERVICE offers maintenance, repairs, and F-GAS certified support, ensuring continuity and maximum efficiency for industrial plants.

Global Quality

Over 80% of RPS production is exported thanks to a range of process chillers developed to the most rigorous European and US standards. RPS is a global partner, synonymous with efficiency, safety, and full international compliance.

Compact, Sustainable, Smart

The New Standard in Compact Chillers



Cube

INDUSTRIAL LIQUID CHILLERS



The CUBE range in R513A offers compact, modular, and highly versatile liquid chillers designed to meet the needs of the most demanding industrial processes.

The reliable hydraulic circuit, with a coaxial copper evaporator immersed in an AISI 304 inertial tank, guarantees thermal stability, low pressure drops, and reliability even with fluids containing impurities. Energy efficiency is ensured by latest-generation scroll compressors (mod. 008–016) and the use of low-GWP refrigerants such as R513A (R290 optional). Advanced digital control and plug & play configuration with integrated hydronic module simplify installation, management, and start-up.

Maximum Reliability in All Conditions

CUBE chillers offer a combination of robustness and advanced protection, thanks to: anti-freeze sensor, flow switch, level sensor, HP/LP pressure switches, and phase monitor. The coaxial evaporator immersed in the buffer tank ensures stable temperature and reduces the number of compressors starts. With the automatic hydraulic bypass (optional), the system maintains maximum reliability even in critical operating conditions.

Non-ferrous hydraulic circuit as option

All CUBE units can be equipped with a completely non-ferrous hydraulic circuit, made of AISI 304 stainless steel, polymers, copper and brass, to ensure maximum purity and chemical compatibility with delicate fluids. Ideal for applications in the food, medical, and laser sectors, where the integrity of the cooling fluid is an essential requirement for process quality and reliability.

Compactness and Operational Flexibility

Designed to guarantee reliability and high performance, CUBE chillers efficiently cool both water and oil, adapting to atmospheric or pressurized circuits. The sturdy structure with standard lifting eyebolts and compact dimensions facilitates handling and installation. The 50/60 Hz dual-frequency power supply (models 001–007) ensures unique operational flexibility, ideal for complex industrial applications.

Sustainable and ready for the future

Designed to guarantee efficiency, longevity, and environmental friendliness, CUBE chillers integrate advanced technological solutions and low environmental impact refrigerants, such as R513A and the optional R290 propane. This future-proof range is designed to anticipate the most stringent environmental regulations, reduce the CO_2 footprint, and ensure a safe, durable, and sustainable investment over time.

Modular solutions for industrial cooling

BH version

Hot gas bypass (±0.5 K)

CUBE – BH units can be configured with a coaxial copper evaporator or AISI 316 plate evaporator and are equipped with a non-ferrous hydraulic circuit as standard. They offer high fluid stability (±0.5 K) thanks to hot gas regulation, brushless EC fans, and advanced PI control. Ideal for laser systems and high-precision processes, they guarantee reliable performance even with variable thermal loads.

FO version

Oil chillers

The CO version is specifically designed for oil cooling in the most demanding industrial processes. This configuration integrates a plate evaporator with an optimized exchange surface to ensure maximum thermal efficiency and high-pressure gear pumps (up to 10 bar), ensuring reliability and operational continuity even under harsh conditions.

Version for pressurized hydraulic circuits

This version, available for models 006–016, features a tank designed for use in pressurized hydraulic circuits (6 barg), such as in the automotive, plastics, laser, and machine tool industries, where controlled pressure and thermal stability are required. It includes a vent valve, safety valve, and expansion tank (optional).
A compact, ready-to-use solution that ensures maximum reliability, safety, and ease of installation.

LW version

Low Water Temperature (-10°C)

The LW version available for CUBE 2–3 units (mod. 006–016) is capable of producing glycol water up to –10 °C thanks to increased thermal insulation, integrated flow switch, and to a specific parameterization of the controller. Perfect for critical processes in the food & beverage, wine, chemical, and pharmaceutical industries, it ensures high stability and precision in temperature control, even in complex operating conditions.

UL version

60 Hz

Models 001–007 (230V/1/60Hz) and 006–016 (460V/3/60Hz) are available in a cUL version, compliant with UL standards for the USA and Canada. The electrical panel, designed and certified according to UL508A, uses premium components and UL electrical cables. The electrical panel of units 009 - 016 guarantees IP44 – NEMA Type 1 protection, making the units suitable for outdoor installations with high safety and reliability standards.

LA version

Low Ambient (-10 °C)

The LA version available for CUBE 2–3 units (mod. 006–016) is designed for safe operation in environments down to –10 °C. Equipped with brushless EC fans, thermal insulation of the hydraulic circuit, and compressor crankcase heater, it ensures maximum reliability, frost protection, and operational continuity even in severe climatic conditions.

NX version

Non Ferrous - plate evaporator

The construction with exclusively non-ferrous materials ensures maximum compatibility with delicate process fluids, preserving quality and operational efficiency. It includes AISI 316 plate evaporator, AISI 304 tank with level sensor, EPDM hydraulic piping, stainless steel IN/OUT hydraulic connections, and brass fittings.

ML version

Low Ambient (-20 °C) - Special

The ML version of the CUBE 2–3 chillers (models 006–016) is designed to operate safely down to –20 °C. Equipped with brushless EC fans, thermal insulation of the hydraulic circuit, compressor crankcase heater, and heater in the electrical panel, it also includes a polycarbonate controller cover, ensuring reliability and continuous operation in harsh climates.

Operating limits

Cooling

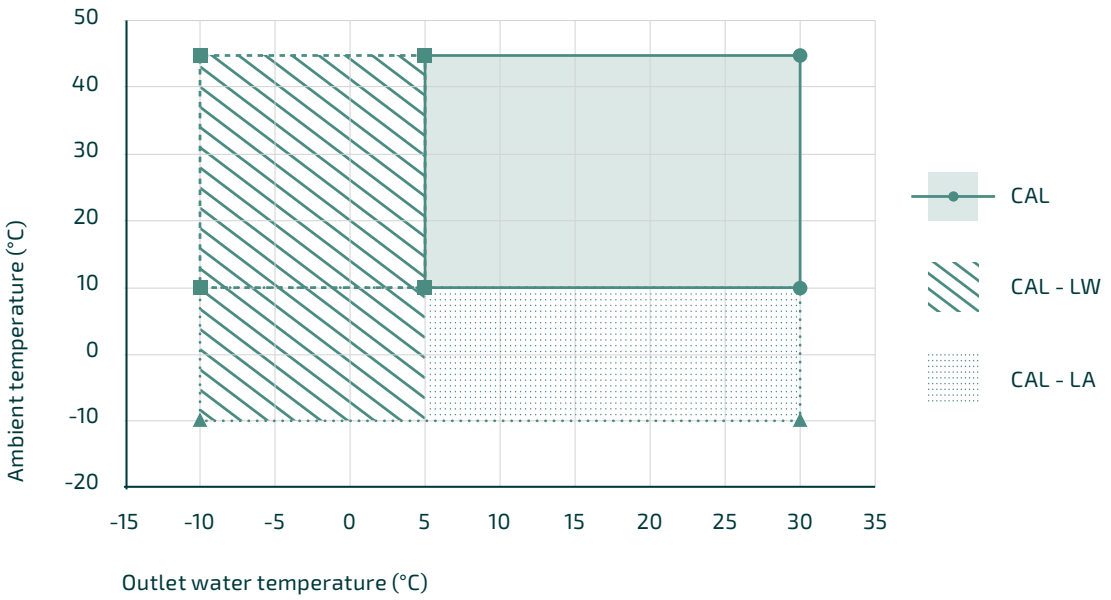

CAL liquid chillers are designed to guarantee full load operation up to an outside temperature of +45°C in summer and up to +5°C in winter (-10°C for LA version mod. 006–016; -20°C for special ML version mod. 006–016). In the standard configuration, they produce chilled water with an evaporator outlet temperature of up to +30°C, with a minimum limit of +5°C, which can be reduced to -10°C in the LW version mod. 006–016.

Advanced microprocessor control

The RS10 microprocessor control was designed by RPS to ensure maximum operational continuity, cost reduction, and intuitive management, with smart functions that optimize every detail of the system.

RS10 – Simplicity and Efficiency for Standard Chillers

The RS10 control unit fitted to CUBE units is based on DIXELL IC121CX technology. The dual-digit display with intuitive icons provides clear and immediate access to parameters, probes, and loads. Thanks to alarm management with a history of up to 50 events and integrated protections (pressure, antifreeze, water flow), operation is always under control. The dynamic set-point and unloading functions optimize consumption, while Modbus RS485 connectivity (via XJ485 TTL/RS485 interface module) ensures total integration with supervision systems.



Advanced Technological Structure

cube Mod. 001 - 005

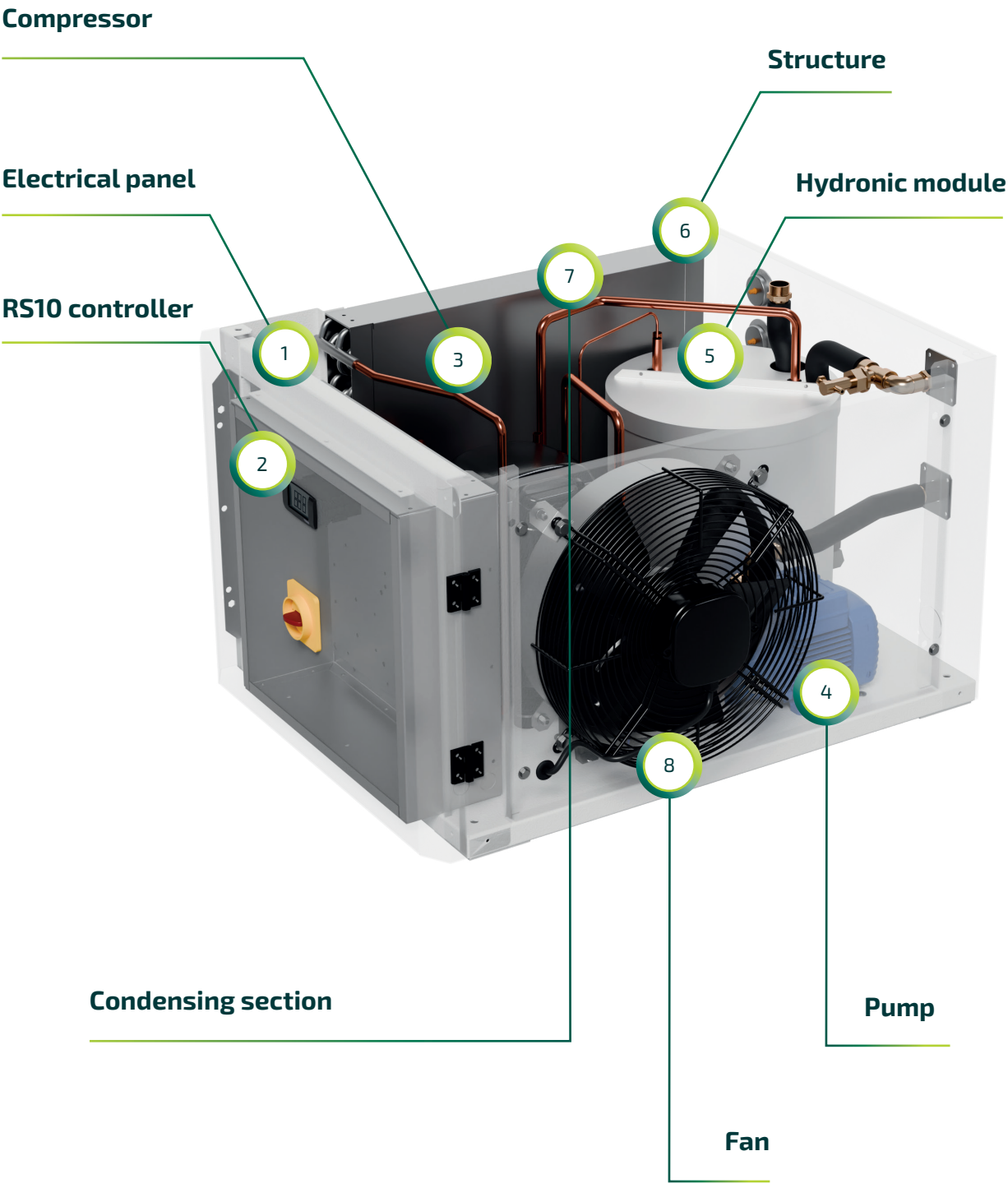

1

Electrical panel

Electrical panel compliant with EN 60204-1 standards (IP33 indoor – dual frequency) 50/60Hz), guarantees maximum safety thanks to the interlocked main switch and electrical separation between control and power. Remote ON/OFF and general alarm contacts are available as standard.

2

RS10 controller

The RS10 controller, based on the DIXELL IC121CX microprocessor, manages and displays unit status, temperature/pressure sensors, loads, and operating functions in real time. It has an alarm history of up to 50 events, dynamic set-point based on analog inputs, operating hours and start-up accounting for compressors/pumps, TTL serial interface, and optional XJ485 module for Modbus RS485 communication.

3

Compressor

Hermetic reciprocating compressors offer an excellent balance between energy efficiency, reliability, and ease of maintenance. The compact and robust design ensures low vibration and noise levels, reducing overall operating costs and ensuring consistent performance even in continuous industrial applications.

4

Pump

Peripheral pumps with Ryton/brass body, brass impeller, and SiC/graphite/FPM mechanical seal, ideal for high head even with low flow rates and continuous 24/7 operation. Available in P3 (3 barg) and P5 (5 barg) versions.

5

Axial fan

Standard AC fans equipped with corrosion-resistant aluminum blades and a thermally protected motor. Their IP54 protection rating ensures reliability in various industrial environments. EC fans (optional) with PP blades and die-cast aluminum casing. Thanks to the brushless motor and integrated inverter, they offer up to 30% energy savings and continuous speed modulation from 10% to 100%.

6

Structure

The galvanized steel structure, powder coated with RAL 7035 polyester paint, guarantees high resistance to corrosion and atmospheric agents. The supporting frame with removable panels ensures quick access to internal components for efficient maintenance. Handling is simple and safe thanks to the standard integrated eyebolts.

7

Condensing section

High-efficiency finned condenser with micro-finned copper tubes and aluminum fins.
Designed for high temperatures, protected by a washable aluminum air filter.
The wide fin spacing minimizes maintenance requirements and optimizes heat exchange.

8

Hydronic module - non-ferrous

The CUBE 1 chiller hydronic module incorporates a copper coil evaporator immersed in a thermally insulated stainless steel tank, designed to handle high flow rates with minimal pressure drops. Reliable in the most demanding industrial applications, it is protected from the risk of freezing by an antifreeze probe and flow switch.

Advanced Technological Structure

cube Mod. 006 - 016

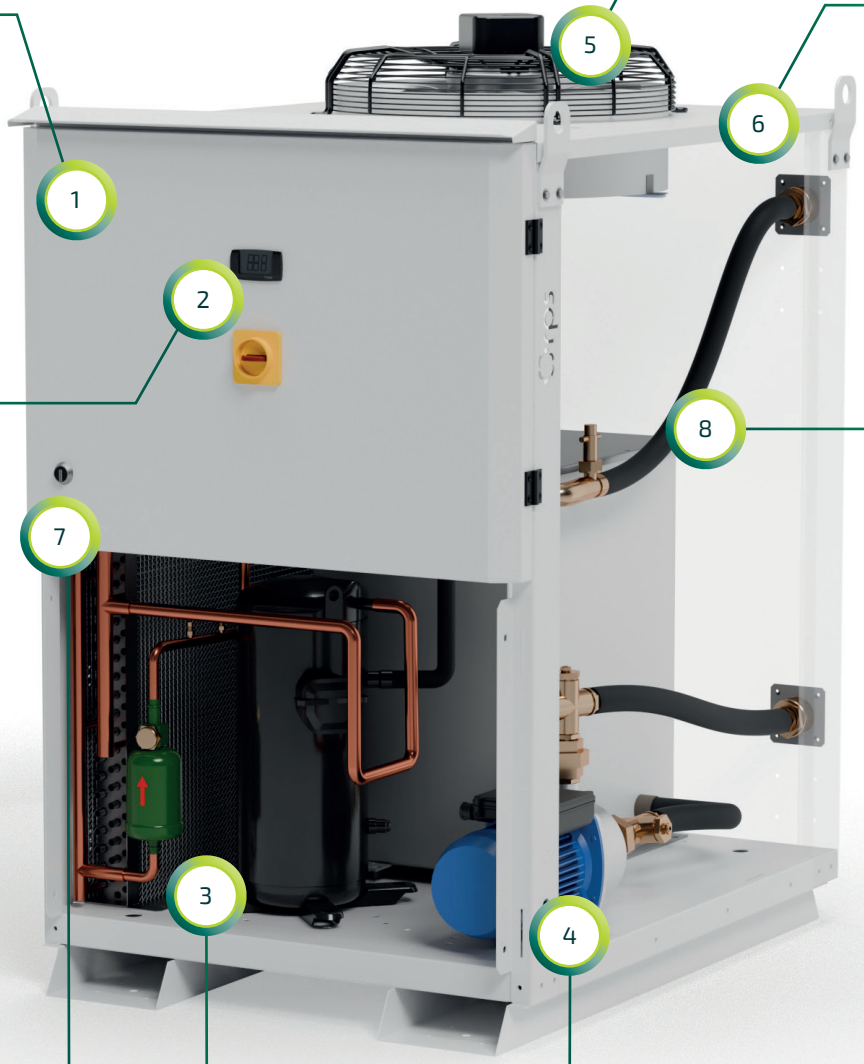

1

Electrical panel

Electrical panel compliant with EN 60204-1 (IP44 outdoor), guarantees maximum safety thanks to the interlocked main switch and electrical separation between control and power. The phase monitor protects the unit from phase failure and reversal, remote ON/OFF and general alarm contacts are available as standard.

2

RS10 controller

The RS10 controller, based on the DIXELL IC121CX microprocessor, manages and displays unit status, temperature/pressure sensors, loads, and operating functions in real time. It has an alarm history of up to 50 events, dynamic set-point based on analog inputs, operating hours and start-up accounting for compressors/pumps, TTL serial interface, and (optional) XJ485 module for Modbus RS485 communication.

3

Compressor

Hermetic reciprocating compressors (models 006–007), characterized by robustness, long life, good energy performance, and low noise/vibration impact. Models 008–016 use scroll compressors equipped with an internal flow breaker and non-return valve to prevent damage from liquid hammering. The gas-cooled 2-pole motor and direct delta start ensure efficiency, protection, and long operating life.

4

Pump

Models 006–009 use peripheral pumps with Ryton/brass body, brass impeller, and SiC/graphite/FPM mechanical seal, ideal for high head even with low flow rates and continuous 24/7 operation. In models 011–016, multi-stage pumps in AISI 304 stainless steel with IE3 motor offer high efficiency, corrosion resistance, and guaranteed durability up to 10,000 hours without maintenance. Available in P3 (3 barg) and P5 (5 barg) versions.

5

Axial fan

Standard AC fans equipped with corrosion-resistant aluminum blades and a thermally protected motor. Their IP54 protection rating ensures reliability in various industrial environments. EC fans (optional) with PP blades and die-cast aluminum casing. Thanks to the brushless motor and integrated inverter, they offer up to 30% energy savings and continuous speed modulation from 10% to 100%.

6

Structure

The galvanized steel structure with RAL 7035 polyester powder coating guarantees high resistance to corrosion and atmospheric agents. The supporting frame with removable panels ensures quick access to internal components for efficient maintenance. Handling is simple and safe thanks to the integrated eyebolts and the provisions for forklift or pallet truck.

7

Condensing section

High-efficiency finned condenser with micro-finned copper tubes and aluminum fins. Designed for high temperatures, protected by a washable aluminum air filter. Wide fin spacing for low maintenance and optimized heat exchange.

8

Hydronic module - non-ferrous

The CUBE 2-3 chiller hydronic module integrates a high-efficiency coaxial copper evaporator immersed in a thermally insulated stainless steel tank, designed to handle high flow rates with minimal pressure drops. Reliable in the most demanding industrial applications, it is protected from the risk of freezing by an antifreeze probe and flow switch.

Main technical features

Basic version

Refrigeration circuit

- Environmentally friendly refrigerant: R513A (GWP=573; ODP=0)
- Models 006-016 comply with the limits required by ErP2021, SEPR HT (EU) 2016/2281
- Hermetic piston compressors (models 001-007) or scroll compressors (models 008-016)
- Copper coil evaporator (models 001-005) or coaxial evaporator (models 006-016) integrated into the stainless steel hydraulic tank
- Finned condenser with copper pipes and aluminum fins, protected by a standard washable aluminum air filter
- HP/LP pressure switches
- Lamination device: capillary tube (models 001-005); thermostatic valve (models 006-016)
- Axial fans complete with protective grilles, die-cast aluminum blades, and AC motor

Atmospheric hydraulic circuit

- Thermally insulated stainless steel tank equipped with connections for filling/emptying and visual level indicator
- Peripheral pumps with Ryton/brass body (mod. 001-009): available in P3 (3 barg) and P5 (5 barg) versions
- Multi-stage centrifugal pumps in AISI 304 stainless steel: (mod. 011-016): available in P3 (3 barg) and P5 (5 barg) versions
- Pump pressure gauge 0-10 barg
- Evaporator antifreeze protection: flow switch and antifreeze probe

Electrical circuit and electronic control

- Electrical panel compliant with EN 60204-1, IP33 (models 001-005) and IP44 (models 006-016) equipped with remote ON/OFF and general alarm contacts, phase sequence relay, and circuit breakers
- RS10 controller with double-digit LED display and TTL serial port, alarm history (up to 50 events)

Optional refrigeration circuit

- [PR] plate evaporator
- [EC] brushless EC fans
- Condenser coil protective treatments: [TT] cataphoresis; [FG] Finguard; [EP] epoxy; [BG] BLYGOLD.

Electronic control option

- [DT] Dynamic set point
- [RS] XJ485 TTL - RS485 communication module kit

Optional electrical circuit

- [CH] Compressor crankcase heater
- [A2] Stabilized 24VDC auxiliary circuit - SPECIAL
- [PC] Multipole electrical connector - SPECIAL
- [SF] Soft Starter - SPECIAL
- [CP] Controller protection cover
- [VR] Voltage control relay
- [CPO] Remote ON/OFF dry contact - SPECIAL

Kit

- [AT] Anti-vibration mounts
- [RT] Wheels
- [NP] Male BSP/NPT adapters
- [WF] Water filter
- [VL] Manual IN/OUT hydraulic valves
- [TR] Remote keypad
- [MS] SLAVE operation (spec.)
- [MM] MASTER operation (spec.)

Hydraulic circuit option

- [AM] Manual hydraulic bypass valve
- [AB] Automatic hydraulic bypass valve
- [AP] Valve between pump and tank
- [KT] Anti-overflow kit
- [AF] Automatic filling
- [DV] Secondary circuit management with 3-way valve
- [NX] Non Ferrous version

Precision Chillers for High-Performance Processes





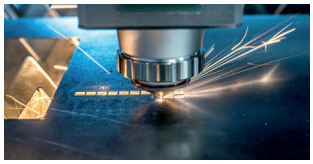


Food & Beverage

Cooling solutions for meat, pasta, chocolate, dairy products, coffee, beer, soft drinks, and juices. CUBE ensures hygiene, quality, aromatic stability, and consistent processes.

Wine

Precision temperature control for winemaking: fermentation, cryomaceration, clarification, tartaric stabilization, and sparkling wine production.
Cooling optimizes productivity, enhances organoleptic characteristics, and guarantees superior, unique, and recognizable wines.

Machine Tools

Spindle cooling, cutting fluids, and linear motors. CUBE units ensure precision, stability, and durability in lathes, machining centers, presses, arc welders, induction furnaces, and water cutting.

Plastics & Rubber

Cooling of molding, extrusion, blow molding, and thermoforming processes: CUBE ensures fast cycles, impeccable quality, and flawless surfaces.

Laser

The high-precision hot gas-regulated version is designed to cool fiber or CO2 laser sources and optics used for welding, cutting, marking, medical applications, and 3D printing. Stable temperatures guarantee beam quality, constant wavelength, and long service life.

Printing

Essential cooling for flexographic, digital, offset, and UV systems. CUBE guarantees brilliant colors, maximum productivity, and consistent quality, preventing downtime and extending the life of your equipment.

Chemicals and pharmaceuticals

Thermal control of reactors, tanks, paints, cosmetics, electroplating, and clean rooms. Thanks to their stainless steel structure (optional), non-ferrous circuits, and high precision, CUBE units improve safety, reproducible quality, and compliance with environmental regulations.

Biogas

Critical cooling for drying biogas intended for cogenerators and biomethane. CUBE guarantees a low dew point, eliminates acid condensation, prevents corrosion, and maximizes safety, reliability, and energy efficiency.

Rental

Temporary cooling solutions for critical processes: managing summer peaks, production increases, or emergencies due to breakdowns. Rental units offer continuity, operational safety, and flexibility for every industrial need.

Medical sector

CUBE guarantees stability for MRI, CT scans, and X-rays. Controlled temperatures ensure sharp images, absolute purity, continuous reliability, and operational safety.

Technical Data

CUBE - R513A	Mod.	001	002	003	004	005	006	007	008	009	011	012	013	016
	Size	CUBE 1					CUBE 2				CUBE 3			
PERFORMANCE - CHILLER														
Cooling capacity (1)	kW	0,9	1,2	1,8	2,4	2,8	4,7	6,4	7,9	8,2	10,2	11,7	13,8	15,2
Electrical power consumption (1)	kW	0,4	0,4	0,6	0,8	0,9	1,5	1,2	2,1	2,1	2,3	2,8	3,0	3,7
Nominal flow rate (1)	m3/h	0,15	0,21	0,31	0,41	0,49	0,80	1,10	1,35	1,40	1,76	2,01	2,37	2,62
Pressure drops (1)	kPa	5	6	7	8	8	5	2,5	3,4	49,6	49,9	60,4	41,3	47,8
EER Energy Efficiency Ratio (1)	kW/kW	2,23	2,73	2,87	2,86	3,14	3,15	5,30	3,76	3,74	4,32	3,99	4,43	4,02
Cooling capacity (2)	kW	/	/	/	/	/	3,2	3,8	5,7	5,9	7,4	8,4	9,5	11,1
Electrical power consumption (2)	kW	/	/	/	/	/	1,3	1,1	2,1	2,1	2,3	2,9	3,0	3,6
EER Energy Efficiency Ratio (2)	kW/kW	/	/	/	/	/	2,41	3,40	2,78	2,79	3,19	2,93	3,15	3,05
SEPR HT (3)		/	/	/	/	/	5,02	5,03	5.01	5.02	5.05	5.05	5.01	5.06
REFRIGERATION CIRCUIT														
No. of compressors / No. of circuits	N°	1 / 1												
Number of axial fans x diameter	N° / mm	1 / 315	1 / 315	1 / 315	1 / 315	1 / 315	1 / 350	1 / 350	1 / 350	1 / 350	1 / 450	1 / 450	1 / 450	1 / 450
Air flow rate	m3/h	1621	1611	1611	1525	1525	2285	2348	2203	2203	4830	4831	4641	4642
HYDRAULIC CIRCUIT														
Available head pressure pump P3 (2)	bar	4,33	4,24	4,07	3,90	3,78	3,24	3,20	2,65	2,24	4,36	4,11	4,01	3,74
Tank capacity	L	20	20	20	20	20	55	55	55	55	80	80	80	80
NOISE														
Sound pressure (4)	dB(A)	43,4	43,0	43,3	44,3	44,3	40,4	45,4	50,1	50,1	51,4	51,4	51,4	51,4
Sound power (5)	dB(A)	71,4	71,0	71,3	72,3	72,3	68,4	73,4	78,1	78,1	79,4	79,4	79,4	79,4
ELECTRICAL DATA														
Power supply	[V/Ph/Hz]	230/1/50-60					230/1/50-60 400/3/50		400/3/50					
Auxiliary circuit power supply	V	24Vac												
IP protection rating		IP33					IP44							
DIMENSIONS AND WEIGHTS														
Width	mm	690	690	690	690	690	655	655	655	655	750	750	750	750
Depth	mm	780	780	780	780	780	725	725	725	725	980	980	980	980
Height	mm	460	460	460	460	460	1090	1090	1090	1090	1300	1300	1300	1300
Weight (6)	kg	75	75	77	77	80	140	143	143	148	230	230	240	240
Hydraulic connections	Rp	1/2"	1/2"	1/2"	1/2"	1/2"	3/4"	3/4"	3/4"	3/4"	1"	1"	1"	1"

Data declared in accordance with UNI EN 14511:2022. The values shown refer to standard configuration units tested under nominal operating conditions, with coaxial evaporator and without accessories/options.

(1) Cold water temperature on the user side - evaporator (in/out) 20°C/15°C; Air temperature on the source side 32°C.
(2) Water temperature of the cold exchanger on the user side - evaporator (in/out) 12°C/7°C; Air temperature of the exchanger on the source side 35°C.
(3) Seasonal energy efficiency of high-temperature process cooling [REGULATION (EU) No. 2016/2281]"
(4) Sound pressure level (cold operation) measured in free field, at a distance of 10 m from the external surface of the unit, in accordance with UNI EN ISO 3744.
(5) Sound power level determined in accordance with UNI EN ISO 3744. Values are subject to a tolerance of ±2 dB.
(6) Empty weight of the unit in STANDARD configuration with coaxial evaporator integrated in the tank, P3 pump (without options/accessories). Tolerance +/-10%.

Technical drawings

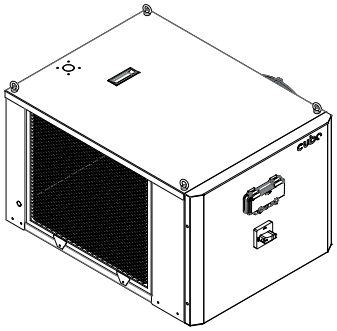

CUBE 1
780 x 690 x H 460 mm

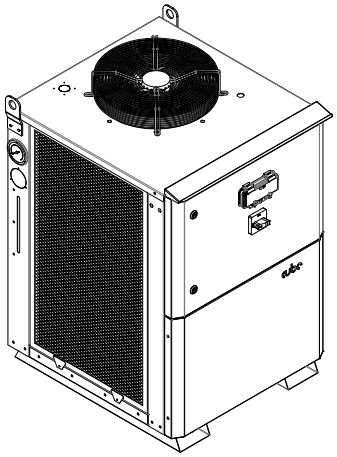

CUBE 2
725 x 655 x H 1090 mm

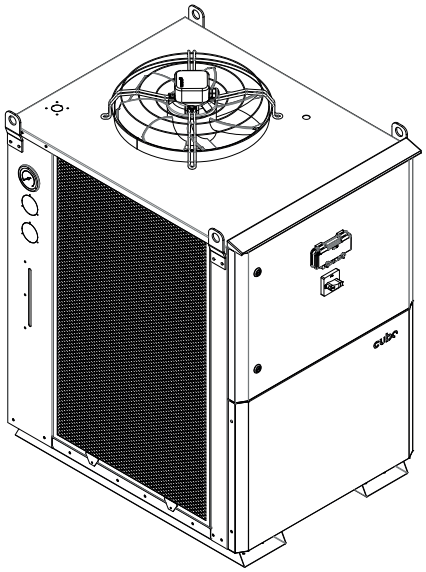

CUBE 3
980 x 750 x H 1300 mm

Why choose CUBE chillers?

Green & Future Proof

Low GWP refrigerants (R513A, R290) and compliance with ErP energy regulations ensure lower environmental impact and a safe, long-lasting investment.

Total reliability in all conditions

Integrated sensors and protections, coaxial evaporators, and hydraulic bypass (optional) ensure continuous operation, safety, and stability even in critical operating conditions.

Non-ferrous hydraulic circuit - option

Stainless steel, copper, polymers, and brass guarantee resistance, fluid purity fluid and compatibility with delicate processes in the food, medical and laser sectors.

Compactness and flexibility

Compact design with easy handling, compatibility with water and oil, 50/60 Hz power supply: a versatile solution for complex industrial installations.

RPS COOLING Srl

Via Veneto 12/B - 46029 Suzzara
(Mantova) - ITALY
Tel. +39 0376 1430010
www.rpscooling.com
sales@rpscooling.com

RPS Cooling France

3 rue Xavier Privas
01000 Bourg - en - Bresse, France
Tel. +33 06 21 60 16 02
www.rpscooling.fr
france@rpscooling.com

RPS Ingeniería de procesos, S.L.

Pol. Industrial Can Rosés
Avda. Can Rosés, 19, nave 4
08191 Rubí (Barcelona)
Tel. +34 935 66 16 29
www.rps-ing.com
info@rps-ing.com

RPS Cooling UK

2 Merus Court, Meridian
Business Park, Leicester
Leicestershire, LE19 1RJ – UK
Ph +44 77 4822 1628
rpscooling.co.uk
sales-uk@rpscooling.com

RPS Cooling USA
95 Mt Read#149 Rochester - NY 14611
Ph. +1 (716) 444- 5585
www.rpscooling-usa.com
sales@rpscooling-usa.com