hybrid

rps PASSION FOR COOLING

Liquid chillers
Free Cooling

for industrial applications with scroll compressors

R454B REFRIGERANT

ErP Tier2



❄ | Cooling capacity from 193 to 1270 KW

❄ | Free cooling capacity from 193 to 1270 KW

MC00000087_202602



Technology, Innovation, and Reliability in Process Cooling

Customized Process Solutions for a Sustainable Future

RPS develops customized process chillers designed to ensure continuous reliability and high performance in every industrial application. RPS's goal is to transform every thermal requirement into an **efficient and technologically advanced system**, capable of offering lasting value to its customers.

RPS looks to the future with an **innovative approach**, offering solutions that integrate **green refrigerants** such as **R290, R454B, R32, and R513A**, compliant with F-GAS and REACH regulations.

Each project is designed to meet the **highest standards of energy efficiency**, in line with Ecodesign requirements and the challenges of the energy transition.

Energy-saving technologies, full inverter systems, free cooling, and heat pumps are at the heart of the design to reduce consumption and environmental impact.
Thanks to its ability to customize every detail, RPS becomes a strategic partner in the sustainable growth of its customers.

Future-Ready Technology

RPS and the Challenge of Global Warming Potential

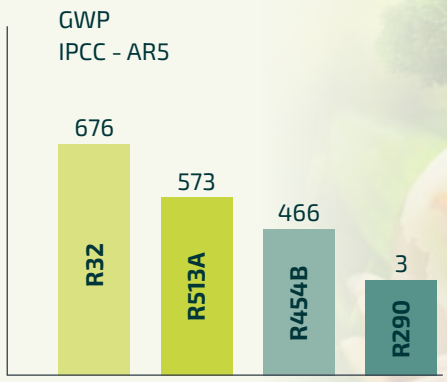

Low GWP refrigerant solutions for a more sustainable future

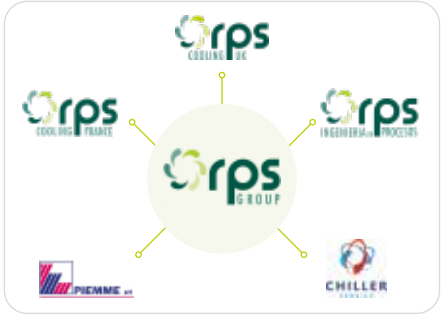



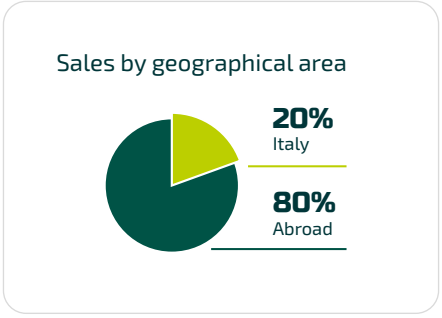

The RPS Group

RPS is a group with a European presence through branches in the UK, France, and Spain. Thanks to the in-house metalworking department of PIEMME S.r.l., it guarantees maximum flexibility, production speed, and customization of chillers.

RENTAL

With a large fleet of chillers ready for rental and a team of expert technicians, CHILLER SERVICE offers maintenance, repairs, and F-GAS certified support, ensuring continuity and maximum efficiency for industrial plants.

Global Quality

Over 80% of RPS production is exported thanks to a range of process chillers developed to the most rigorous European and US standards. RPS is a global partner, synonymous with efficiency, safety, and full international compliance.

Smarter, Greener, Stronger

HYBRID+

The Ultimate Evolution in Process Chillers



Hybrid+

INDUSTRIAL LIQUID CHILLERS

R454B REFRIGERANT

ErP Tier2

Efficiency, Sustainability, Reliability

The HYBRID range represents the new generation of liquid chillers and free cooling systems, designed for industrial and mission-critical applications where reliability and operational continuity are essential. The heart of the units is the shell & tube evaporator, synonymous with robustness, stability, and long life even with fluids that are not perfectly clean. Latest generation scroll compressors, electronic expansion valves, and EC fans (optional) guarantee high energy efficiency, especially at partial loads. The intelligent Free Cooling system uses outside air to drastically reduce consumption, with average savings of up to 70%. The use of low GWP refrigerants and innovative condensing coils limits the environmental impact. Finally, the plug & play configuration with integrated hydronic module simplifies installation and start-up, reducing time and costs.



Maximum Reliability in All Conditions

HYBRID chillers ensure continuous 24/7 operation thanks to a robust structure and a complete set of protections: pressure switches, safety valves, sensors, and electronic expansion valves with capacitive backup. The shell and tube evaporator, resistant to impure fluids and redundant configurations with multiple compressors and double pumps guarantee maximum reliability even in critical conditions.

Unmatched Versatility and Flexibility

The HYBRID range is the only platform capable of operating as a chiller, free cooling or as a heat pump, ideal for comfort and industrial processes. HYBRID units offer maximum adaptability thanks to the availability of compact plate evaporators or robust shell and tube evaporators. A wide operating range (-20°C / +55°C) and dedicated acoustic versions ensure efficiency and continuity in all conditions.

High Efficiency, Maximum Savings

HYBRID chillers offer top performance with SEPR HT up to 6.95, reducing consumption and operating costs. High efficiency is guaranteed by the multi-scroll architecture and EC fans (optional), together with electronic valves and inverter pumps that optimize partial load. With total or hybrid Free Cooling, energy savings reach up to 70%. Heat recovery and optimized refrigerant management complete a sustainable and highly cost-effective system.

Sustainable innovation for a secure future

HYBRID chillers combine advanced technology and sustainability, offering a future-proof range designed to last. They are available with standard low GWP R454B refrigerant, R290 propane (GWP 3) or PFAS-free R32 (REACH compliant). This choice significantly reduces environmental impact, promotes compliance with the latest regulations, and guarantees a safe and long-lasting investment, superior to traditional solutions, with efficient and reliable performance.

Advanced Modularity for Process Cooling

FB version
Free Cooling

Thanks to the integrated free cooling coils, it is possible to exploit outside air that is cooler than the process water, reducing the use of compressors and energy consumption. Under favorable conditions, the system operates in total free cooling mode, with the compressors turned off, ensuring significant savings in operating costs (OPEX) and greater environmental sustainability.

SL version
Low Noise

The SL version is designed to minimize noise emissions while maintaining energy efficiency. Includes acoustic insulation of the paneling, sound-absorbing hood for compressors, and low-speed EC fans. Ideal for sensitive environments such as hotels, offices, schools, museums, and public buildings, it offers maximum acoustic comfort without compromising performance and reliability.

PR version
Plate evaporator

The heart of the PR version is the brazed plate evaporator in AISI 316 stainless steel. This design guarantees total corrosion resistance, protecting the process fluid from contamination, ideal for sensitive sectors. The large heat exchange surfaces are integrated into extremely compact dimensions and guarantee higher than standard energy efficiency levels.

LW version
Low Water Temperature (-10°C)

The LW version is designed for the production of glycol water down to -10 °C, thanks to the increased thermal insulation of the hydraulic circuit and the dedicated parameterization of the controller. Ideal for the food & beverage, wine, and chemical-pharmaceutical sectors in the chemical-pharmaceutical sector where precise and reliable temperature control is required.

UL version
60 Hz

All HYBRID units are available in a cUL version, compliant with UL standards for the US and Canada. The electrical panel, designed and certified according to UL508A, uses premium components and UL electrical cables. The electrical panel guarantees IP54 – NEMA Type 1 protection, making the units suitable for outdoor installations with high safety and reliability standards.

NX version
plate evaporator
Non Ferrous

Designed for delicate process fluids, it uses only non-ferrous materials (stainless steel, polymers, brass). Includes AISI 316 plate evaporator and AISI 304 tank compatible with pressurized circuits (option) featuring a level sensor. Ideal for the food, medical, and chemical sectors.

TZ version
High Ambient Temperature (+55 °C)

The ideal solution for high temperature environments, up to +55 °C. Uses R513A refrigerant, specifically designed for high condensation temperatures. The TZ version (SPECIAL) includes EC fans, hydraulic circuit insulation, and a dedicated air conditioner for the electrical panel. Reliability and performance are guaranteed even in the most demanding conditions.

ML version
Low Ambient (-20 °C) - Special

The ML version is designed to operate safely down to –20 °C. Equipped with brushless EC fans, thermal insulation of the hydraulic circuit, compressor crankcase heater and heater in the electrical panel, it also includes a polycarbonate cover for the controller, ensuring reliability and operational continuity in harsh climates.

iPRO – Microprocessor control

iPRO – Advanced Control for Maximum Efficiency

The iPRO microprocessor control guarantees maximum operational continuity, cost reduction, and intuitive management. Smart functions and advanced logic optimize every detail of the system, offering superior efficiency and reliability in all conditions.

Technical features

The advanced logic of iPRO guarantees energy savings and reduced OPEX:

- Dynamic free cooling and total/partial heat recovery on the gas or water side.
- Dynamic Set Point
- Energy Saving Management functions programmable via internal clock (RTC) or digital signals.
- Complete management of the refrigeration cycle with pump down, progressive unloading, DHW production, and anti-legionella function.
- Management of EVD drivers dedicated to controlling electronic expansion valves (EEV): stable superheating in all conditions, allowing operation at reduced condensation temperatures, increasing seasonal efficiency and system reliability.

VISOTOUCH display – Intuitive interface

- Touchscreen graphics that can be customized with integrated LED indicators for unit status and alarms.
- Multilingual selection and flexible parameter configuration.



Total connectivity

The platform offers broad compatibility:

- Modbus RTU and Modbus TCP/IP protocols
- RS485 (Master/Slave), CANBus, Ethernet, USB interfaces and, on request, RS232 for GSM modems.
- The internal data logger records up to 100 events, facilitating predictive maintenance and advanced analysis.

Reliability and Safety

- iPRO integrates advanced alarm management: probe failure, high/low pressure, compressor overload, scheduled maintenance) with real-time monitoring.
- All low-voltage connections are separate, ensuring maximum electrical safety and preventing interference.
- Designed for mission-critical applications, iPRO ensures operational continuity, long-term reliability, and complete system protection.



Advanced Technological Structure

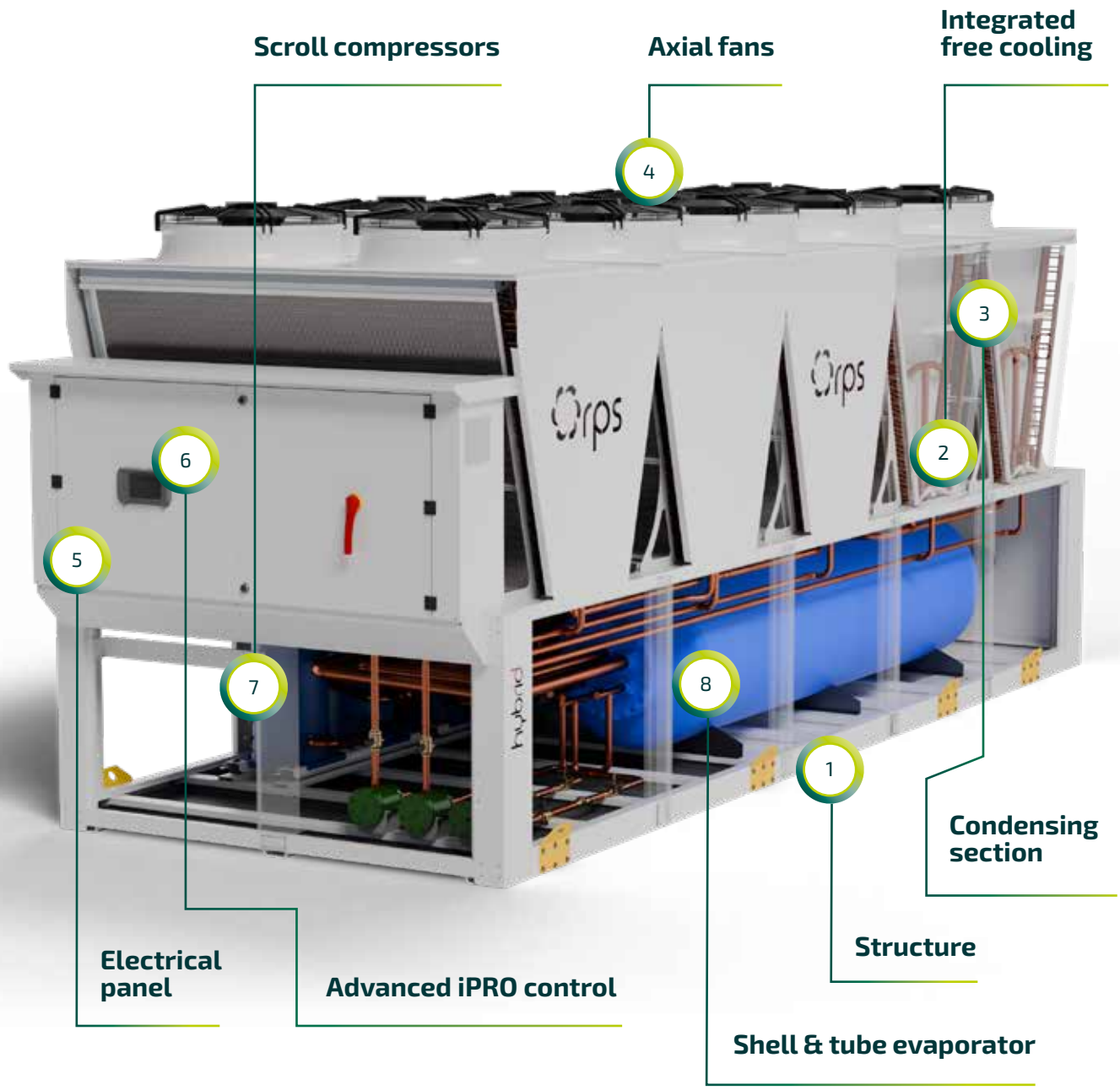

Integrated hydronic modules

Pumps

Horizontal multistage centrifugal pumps in AISI 304 stainless steel, designed for process cooling. They offer high efficiency, corrosion resistance, and a service life of up to 10,000 hours without maintenance. Available in different head ratings (P3, P5, P3+P3, P5+P5) and equipped with an IE3 motor with inverter control (optional) for optimal performance and precise flow control.

Storage tank

The carbon steel buffer tank (option for HYBRID 1-2-3-4 option) is designed for 6 barg and equipped with a drain valve, automatic vent, anti-condensation insulation from 20 mm with protective film and control instruments such as differential pressure switch, antifreeze probe, and glycerine-filled pressure gauge. The optional integrated hydronic module includes pumps, storage tank, and main hydraulic components: a complete package that reduces installation space, time, and costs.

1

Structure

The structure, made of galvanized carbon steel and painted with RAL 7035 polyester powder, ensures total resistance to atmospheric agents and corrosion. The high-protection modular panels preserve the integrity of the internal components, improving reliability and durability. The base is equipped with lifting eyebolts for safe transport, which can be removed after installation. Pre-drilled holes on the base allow for the quick application of anti-vibration mounts.

2

Integrated free cooling

Dedicated copper and aluminum finned pack air/water heat exchangers allow for pre-cooling or total cooling of the fluid. A 3-way valve regulates operating modes, maximizing efficiency. Activation occurs when the outside air is at least 1°C colder than the inlet water. V-shaped coils increase the exchange surface area while maintaining compactness.

3

Condensing section

High-efficiency finned coil heat exchanger with copper pipes and corrugated aluminum fins arranged in a "V" pattern to maximize heat exchange. Designed for high temperatures, with optional washable air filters and wide fin spacing to reduce maintenance, ensuring optimal performance and reliability over time.

4

Axial fans

High-performance AC axial electric fans with painted aluminum blades and rotor, lightweight, corrosion-resistant, and aerodynamically efficient, with stainless steel grille and supports and robust IP54 motor controlled by a phase cut regulator. High-efficiency EC version (optional) with brushless motor, die-cast aluminum casing, and continuous adjustment from 10–100%, offering up to 30% energy savings.

5

Electrical panel

Compliant with EN 60204-1 standards and also available in a UL/CSA version, the electrical panel ensures maximum safety thanks to the interlocked main switch and the separation between power and control. IP54 protection makes it suitable for outdoor use. The phase monitor prevents damage from phase failure or reversal. Alarms and remote ON/OFF contacts are integrated as standard.

6

Advanced iPRO control

The iPRO microprocessor ensures energy efficiency and advanced management with intelligent free cooling functions. The standard Visotouch display offers an intuitive interface. RS485, Ethernet/ModBus TCP/IP, and RS232 connectivity ensures remote control, reliability, and predictive maintenance.

7

Scroll compressors

High-efficiency hermetic tandem scroll compressors equipped with IDV technology guarantee high performance even at partial loads. Installed on anti-vibration mounts, they ensure quiet operation and reduced vibrations. Integrated overheating and overcurrent protection offer maximum safety, while high resistance to liquid slugging ensures reliability and continuous operation over time.

8

Shell and tube evaporator

High-efficiency shell and tube evaporator with copper tubes and carbon steel shell, can be integrated into a hydraulic tank for high flow rates and low pressure drops. Robust, reliable, and inspectable, it guarantees maximum heat exchange efficiency and complete protection against ice formation thanks to an anti-freeze probe and differential pressure switch, with automatic vent valve and expansion tanks.

Main technical features

Basic version

Refrigeration circuit
- Environmentally friendly refrigerant: R454B (GWP= 467; ODP=0), R32 (special);
- All HYBRID chillers comply with the limits required by ErP2021, SEPR HT (EU) 2016/2281- SEPR MT (EU) 2015/1095 regulations;
- High-efficiency hermetic scroll compressors featuring IDV technology and crankcase heater;
- High-efficiency shell and tube evaporator with copper tubes and carbon steel shell;
- Finned condenser with copper tubes and aluminum fins;
- HP/LP pressure switches;
- High and low pressure refrigerant gauges;
- High and low pressure transducers;
- Compressor discharge temperature sensor;
- Electronic expansion valve (EEV);
- Axial fans complete with protective grilles, die-cast aluminum blades, and phase cut speed regulator

Hydraulic circuit
- Thermally insulated carbon steel tank (HYBRID 1-2-3-4 option) designed for 6 barg and equipped with drain valves, automatic vent, automatic loading unit;
- Multi-stage centrifugal pumps in AISI 304 stainless steel: available in P3 (3 barg) and P5 (5 barg), P3 + P3, P5 + P5 versions;
- Pump pressure gauge 0-10 barg
- Evaporator anti-freeze protection: differential pressure switch and anti-freeze probe

Electrical circuit and electronic control
- Electrical panel compliant with EN 60204-1, IP54 (outdoor) equipped with remote ON/OFF contacts and general alarm, phase sequence relay;
- iPRO controller with Visotouch display equipped with RS485, Ethernet/ModBus TCP/IP, and RS232 connectivity.

Optional refrigeration circuit

- [VC] compressor valves
- [EC] EC fans
- [EChp] high head EC fans (spec. - 120Pa)
- Condensing coil protective treatments:
  - [TT] cataphoresis;
  - [FG] Finguard;
  - [EP] epoxy;
  - [BG] BLYGOLD.
- [PHR] desuperheater (spec.)
- [THR] - Total heat recovery (spec.)

Optional electrical circuit

- [A2] Auxiliary circuit stabilized at 24 V DC (spec.)
- [SF] Soft starter (spec.)
- [CP] Plastic cover for digital thermostat
- [UL] UL-CSA certified version
- [VR] Voltage monitoring relay
- [CPO] Clean contact for remote ON/OFF (spec.)
- [PFC] Power factor correction capacitors (spec.)
- [HT] Pump anti-freeze function

Electronic circuit option

- [DT] Dynamic set point

Kit

- [AT] Anti-vibration mounts
- [NP] Male BSP/NPT adapters
- [WF] Water filter
- [VL] Manual IN/OUT hydraulic valves
- [TR] Remote keypad
- [MS] SLAVE operation (spec.)
- [MM] MASTER operation (spec.)

Hydraulic circuit option

- [AM] Manual hydraulic bypass valve
- [AB] Automatic hydraulic bypass valve
- [AP] Manual valve between pump and tank
- [AF] Expansion tank (for closed tank)
- [VIC] Victaulic inlet/outlet connections
- [CR] Mesh closure for side panels
- [CV] Side panels on the hydraulic side and compressor cabinet insulation

Technical drawings

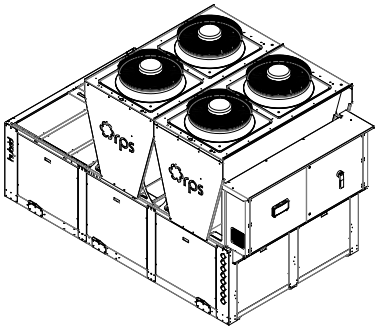

Hybrid 1+
2100 x 3900 x H 2500 mm

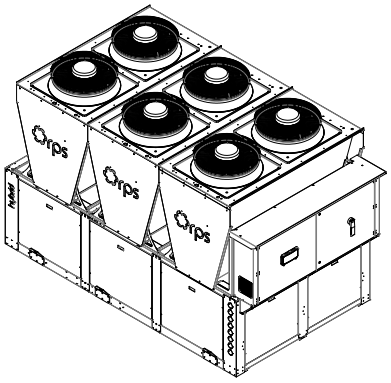

Hybrid 2+
2100 x 3900 x H 2500 mm

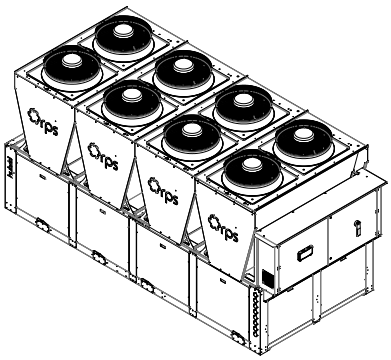

Hybrid 3+
2100 x 5000 x H 2500 mm

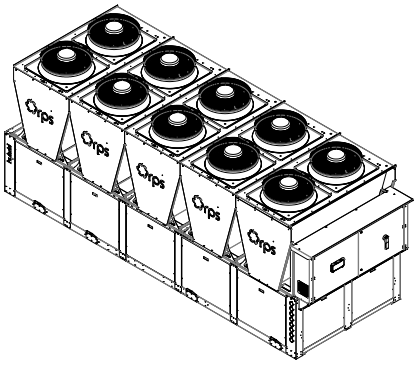

Hybrid 4+
2100 x 6110 x H 2500 mm

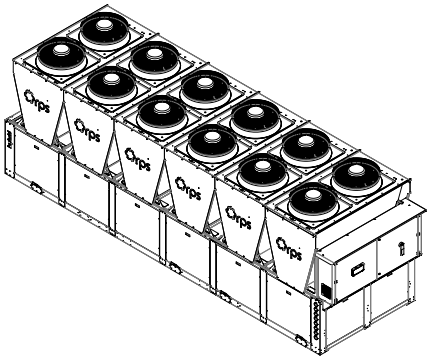

Hybrid 5+
2100 x 7220 x H 2500 mm

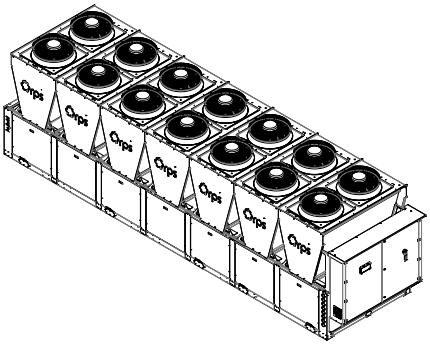

Hybrid 6+
2100 x 8440 x H 2500 mm

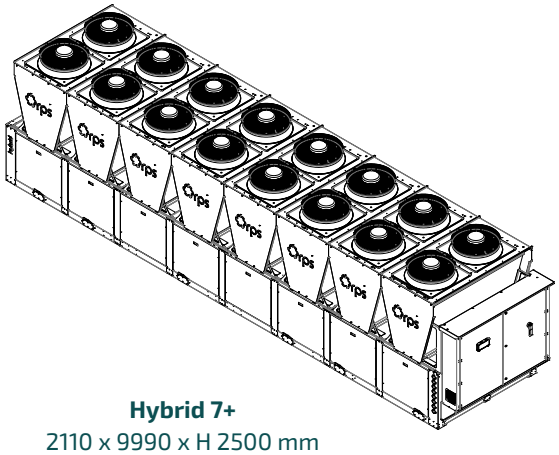

Hybrid 7+
2110 x 9990 x H 2500 mm

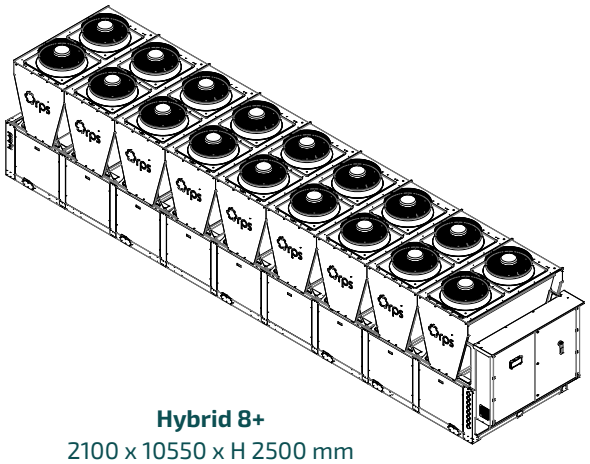

Hybrid 8+
2100 x 10550 x H 2500 mm

Technical data

HYBRID+ R454B	Mod.	150+	175+	201+	224+	248+	278+	310+	356+	402+	449+
	Size	HYBRID 1+				HYBRID 2+				HYBRID 3+	
PERFORMANCE - CHILLER											
Cooling capacity (1)	kW	193,0	245,0	269,0	285,0	341,0	380,0	414,0	471,0	541,0	596,0
Electrical power consumption (1)	kW	41,1	56,7	66,7	74,3	77,8	90,6	103,0	120,0	128,0	148,0
Nominal flow rate (1)	m3/h	33,4	42,2	46,4	49,2	58,8	65,6	71,4	81,2	93,2	103,0
Pressure drops (1)	kPa	45	46	53	43	48	74	49	37	45	61
EER (1)	kW/kW	4,70	4,32	4,03	3,84	4,38	4,19	4,02	3,92	4,23	4,03
Cooling capacity (2)	kW	151,0	193,0	213,0	229,0	269,0	300,0	328,0	374,0	424,0	472,0
Electrical power consumption (2)	kW	42,0	56,8	66,4	73,8	77,6	90,0	102,0	118,0	126,0	146,0
EER (2)	kW/kW	3,60	3,40	3,21	3,10	3,47	3,33	3,22	3,17	3,37	3,23
SEPR HT (3)		6,95	6,38	5,94	6,24	6,29	6,14	5.86	6,04	5,89	6,00
REFRIGERATION CIRCUIT											
No. of compressors / No. of circuits	N°	4 / 2									
Axial fans / diameter	N° / mm	4 / 710				6 / 710				8 / 710	
Fan air flow rate	m3/h	59730	62940	64420	64380	92690	95150	96780	96280	128800	128700
HYDRAULIC CIRCUIT											
Available head pressure pump P3 (2)	bar	2,83	2,75	2,64	2,66	3,16	3,06	2,90	2,74	2,70	2,56
Tank capacity (optional)	L	500	500	500	500	500	500	750	750	750	750
NOISE											
Sound pressure (4)	dB(A)	56,3	60,1	61,6	61,6	61,5	65,5	67,6	67,5	67,7	68,7
Sound power (5)	dB(A)	84,3	88,1	89,6	89,6	89,5	93,5	95,5	95,5	95,7	96,7
ELECTRICAL DATA											
Power supply	V/Ph/Hz	400/3/50									
Auxiliary circuit power supply	V	24Vac									
IP protection rating		IP54									
DIMENSIONS AND WEIGHTS											
Width	mm	2100	2100	2100	2100	2100	2100	2100	2100	2100	2100
Depth	mm	3900	3900	3900	3900	3900	3900	3900	3900	5000	5000
Height	mm	2500	2500	2500	2500	2500	2500	2500	2500	2500	2500
Weight (6)	kg	2213	2308	2413	2419	3163	3253	3362	3401	4224	4302
Hydraulic connections	Rp / DN	3"	3"	3"	3"	125	125	125	125	150	150

Data declared in accordance with UNI EN 14511:2022. The values shown refer to units in standard configuration tested under nominal operating conditions, with shell & tube evaporator and without accessories/options

(1) Cold exchanger water temperature on the user side - evaporator (in/out) 20°C/15°C; Air exchanger temperature on the source side 32°C.
(2) Water temperature of cold exchanger on user side - evaporator (in/out) 12°C/7°C; Air temperature of exchanger on source side 35°C.
(3) Seasonal energy efficiency of high-temperature process cooling [REGULATION (EU) No. 2016/2281]
(4) Sound pressure level measured in free field, at a distance of 10 m from the external surface of the unit, in accordance with UNI EN ISO 3744.
(5) Sound power level determined in accordance with UNI EN ISO 3744. Values are subject to a tolerance of ±2 dB.
(6) Empty weight of the unit in STANDARD configuration with shell & tube evaporator, P3 pump (without options/accessories). Tolerance +/-10%.

Technical data

HYBRID+ R454B	Mod.	495+	557+	604+	673+	743+	805+	851+	898+	990+
	Size	HYBRID 4+		HYBRID 5+		HYBRID 6+		HYBRID 7+		HYBRID 8+
PERFORMANCE - CHILLER										
Cooling capacity (1)	kW	636,0	736,0	814,0	884,0	961,0	1000,0	1080,0	1200,0	1270,0
Electrical power consumption (1)	kW	167,0	184,0	192,0	222,0	232,0	247,0	255,0	294,0	304,0
Nominal flow rate (1)	m3/h	110,0	127,0	140,0	152,0	166,0	173,0	185,0	208,0	219,0
Pressure drops (1)	kPa	67	47	51	81	38	40	48	39	42
EER (1)	kW/kW	3,81	4,00	4,24	3,98	4,14	4,05	4,24	4,08	4,18
Cooling capacity (2)	kW	505,0	583,0	643,0	699,0	760,0	796,0	850,0	953,0	1000,0
Electrical power consumption (2)	kW	164,0	181,0	191,0	218,0	230,0	244,0	253,0	291,0	303,0
EER (2)	kW/kW	3,08	3,22	3,37	3,21	3,30	3,26	3,36	3,27	3,30
SEPR HT (3)		5,70	6,04	6,15	5,90	6.32	6,14	6,09	6,12	6,17
REFRIGERATION CIRCUIT										
No. of compressors / No. of circuits	N°	6 / 3				8 / 4				
Axial fans / diameter	N° / mm	10 / 710		12 / 710		14 / 710		16 / 710		18 / 710
Fan air flow rate	m3/h	127300	159200	192000	191700	220400	223100	256100	255400	287300
HYDRAULIC CIRCUIT										
Available head pressure pump P3 (2)	bar	2,87	2,30	3,31	3,24	2,89	2,83	2,45	2,74	2,66
Tank capacity (optional)	L	750	750	750	750	1000	1000	1000	1000	1000
NOISE										
Sound pressure (4)	dB(A)	69,5	69,4	69,5	70,4	70,6	70,6	70,7	71,7	72,2
Sound power (5)	dB(A)	97,5	97,4	97,5	98,4	98,6	98,6	98,7	99,7	100,1
ELECTRICAL DATA										
Power supply	V/Ph/Hz	400/3/50								
Auxiliary circuit power supply	V	24Vac								
IP protection rating		IP54								
DIMENSIONS AND WEIGHTS										
Width	mm	2100	2100	2100	2100	2100	2100	2100	2100	2100
Depth	mm	6110	6110	7220	7220	8440	8440	9990	9990	10550
Height	mm	2500	2500	2500	2500	2500	2500	2500	2500	2500
Weight (6)	kg	5088	5266	5963	6164	7198	7226	7832	8249	9112
Hydraulic connections	DN	150	150	150	150	150	150	150	175	175

Data declared in accordance with UNI EN 14511:2022. The values shown refer to units in standard configuration tested under nominal operating conditions, with shell & tube evaporator and without accessories/options

(1) Cold exchanger water temperature on the user side - evaporator (in/out) 20°C/15°C; Air exchanger temperature on the source side 32°C.
(2) Water temperature of cold exchanger on user side - evaporator (in/out) 12°C/7°C; Air temperature of exchanger on source side 35°C.
(3) Seasonal energy efficiency of high-temperature process cooling [REGULATION (EU) No. 2016/2281]
(4) Sound pressure level measured in free field, at a distance of 10 m from the external surface of the unit, in accordance with UNI EN ISO 3744.
(5) Sound power level determined in accordance with UNI EN ISO 3744. Values are subject to a tolerance of ±2 dB.
(6) Empty weight of the unit in STANDARD configuration with shell & tube evaporator, P3 pump (without options/accessories). Tolerance +/-10%.

Operating limits

Cooling

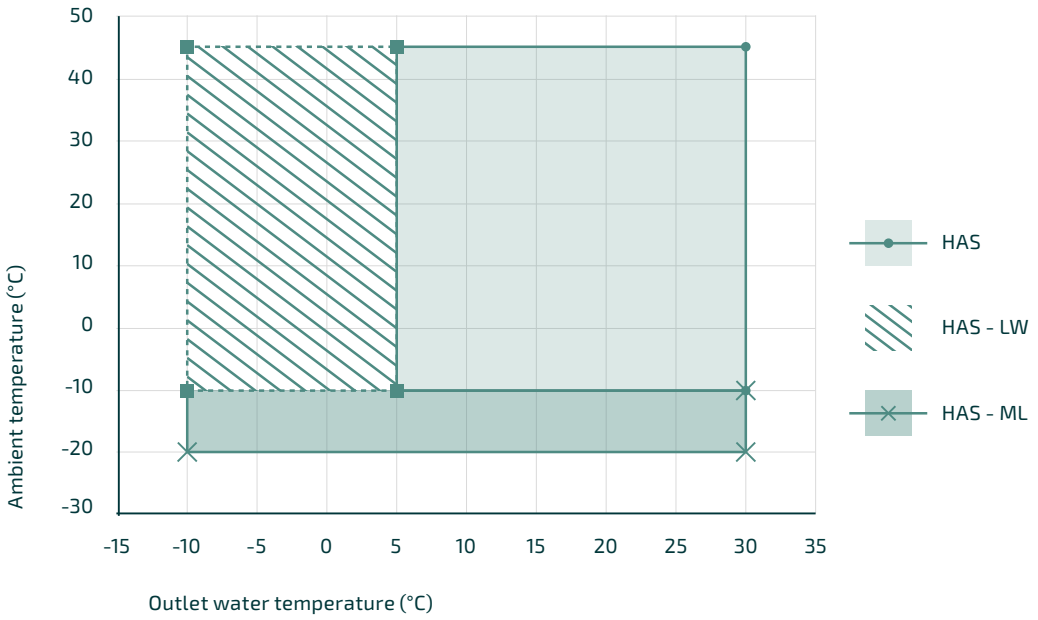

HAS liquid chillers are designed to guarantee full load operation up to an outside temperature of +45°C in summer and down to -10°C in winter (-20°C for ML version). In the standard configuration, they produce chilled water with an evaporator outlet temperature of up to +25 °C, with a minimum limit of +5 °C, which can be reduced to -10 °C in the LW version.

Why choose Hybrid chillers and free cooling systems

Green & Future Proof

Low GWP R454B refrigerant and natural R290 option (R32 on request): future-proof solutions, compliant with F-GAS and REACH directives, to reduce your environmental footprint and protect your investment.

Maximum Efficiency, Maximum Savings

SEPR HT up to 6.95, IDV scroll compressors and EC fans (optional): top-of-the-range performance market-leading performance, reduced consumption, and a quick return on investment.

Connectivity & Control

Advanced adjustment via iPRO programmable controller with Visotouch interface. Standard connectivity: RS485 (Master/Slave), CANBus, Ethernet, USB.

Total reliability in all conditions

Robust architecture, standard sensors and safety devices, submerged evaporator and automatic hydraulic bypass (optional) for operational continuity even in critical conditions.

Unmatched Versatility

Unique platform available both in chiller and free cooling versions, with options to extend operating limits. It offers maximum flexibility thanks to the choice between a shell-and-tube evaporator for industrial use and a compact and efficient plate evaporator.

Precision Chillers for High-Performance Processes








Food & Beverage

Cooling solutions for meat, pasta, chocolate, dairy products, coffee, beer, soft drinks, and juices. HYBRID chillers ensures hygiene, quality, aromatic stability, and consistent processes.

Wine

Precision temperature control for winemaking: fermentation, cryomaceration, clarification, tartaric stabilization, and sparkling wine production. Efficient cooling optimizes productivity, enhances organoleptic characteristics, and guarantees superior, unique, and recognizable wines.

Plastics & Rubber

Cooling of molding, extrusion, blow molding, and thermoforming processes: HYBRID ensures fast cycles, impeccable quality, and flawless surfaces.

Printing

Essential cooling for flexographic, digital, offset, and UV systems. HYBRID guarantees bright colors, maximum productivity, and consistent quality, avoiding machine downtime and extending equipment life.

Chemicals and Pharmaceuticals

Thermal control of reactors, tanks, paints, cosmetics, electroplating, and clean rooms. Thanks to their high efficiency and reliability, HYBRID units improve safety, reproducible quality, and compliance with environmental regulations.

Biogas

Critical cooling for drying biogas intended for cogenerators and biomethane. HYBRID range guarantees a low dew point, eliminates acid condensation, prevents corrosion, and maximizes safety, reliability, and energy efficiency.

Rental

Temporary cooling solutions for critical processes: managing summer peaks, production increases, or emergencies due to breakdowns. HYBRID RENTAL units offer continuity, operational safety, and flexibility for every industrial need.

Medical

HYBRID guarantees thermal stability for MRI, CT, and X-ray imaging, ensuring sharp, high-purity images. Circuit redundancy allows for continuous reliability and operational safety.

RPS COOLING Srl

Via Veneto 12/B - 46029 Suzzara
(Mantova) - ITALY
Tel. +39 0376 1430010
www.rpscooling.com
sales@rpscooling.com

RPS Cooling France

3 rue Xavier Privas
01000 Bourg - en - Bresse, France
Tel. +33 06 21 60 16 02
www.rpscooling.fr
france@rpscooling.com

RPS Ingeniería de procesos, S.L.

Pol. Industrial Can Roses
Avda. Can Rosés, 19, nave 4
08191 Rubí (Barcelona)
Tel. +34 935 66 16 29
www.rps-ing.com
info@rps-ing.com

RPS Cooling UK

2 Merus Court, Meridian
Business Park, Leicester
Leicestershire, LE19 1RJ – UK
Ph +44 77 4822 1628
rpscooling.co.uk
sales-uk@rpscooling.com